LHD®

LOAD HANDLING DEVICES

ATHENA 110

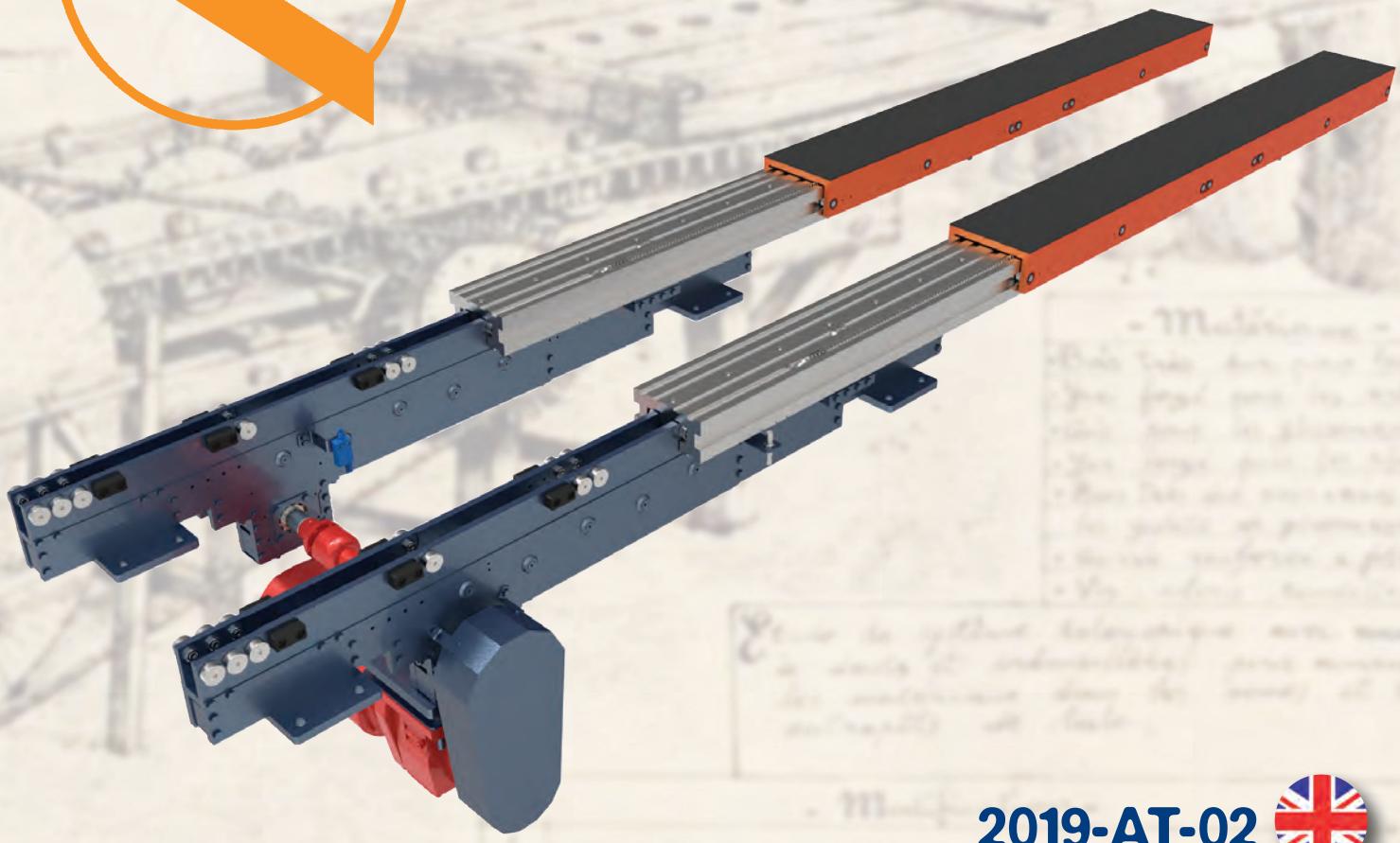

2019-AT-02

ATHENA 110

Intermediate fork of the ATHENA series, it's a very versatile and safe device equipment. It can rely on a solid structure, resulting in a remarkably small bending.

Among its many applications there is the possibility to be installed upside down, for special purposes. Thanks to its outstanding performances it's the most used fork of this series, because despite its thoughness it preserves good operating speed and working paces.

It's fit for the same operating sectors as other ATHENA series forks. As for the transmission, it's available both with racks and pinions and with chains.

PRODUCT CODE	Q LOAD (KG)	L FIXED BODY LENGTH (MM)	Ls UPPER SLIDE LENGTH (MM)	S1 STROKE (MM)	MAX BENDING UNDER LOAD (MM)
AT110-150	1500	1500	1500	1600	10
AT110-160		1600	1600	1700	12
AT110-170		1700	1700	1800	13
AT110-180		1800	1800	1900	15
AT110-190		1900	1900	2000	17
AT110-200		2000	2000	2100	21
AT110-220		2200	2200	2300	27
AT110-240		2400	2400	2500	33

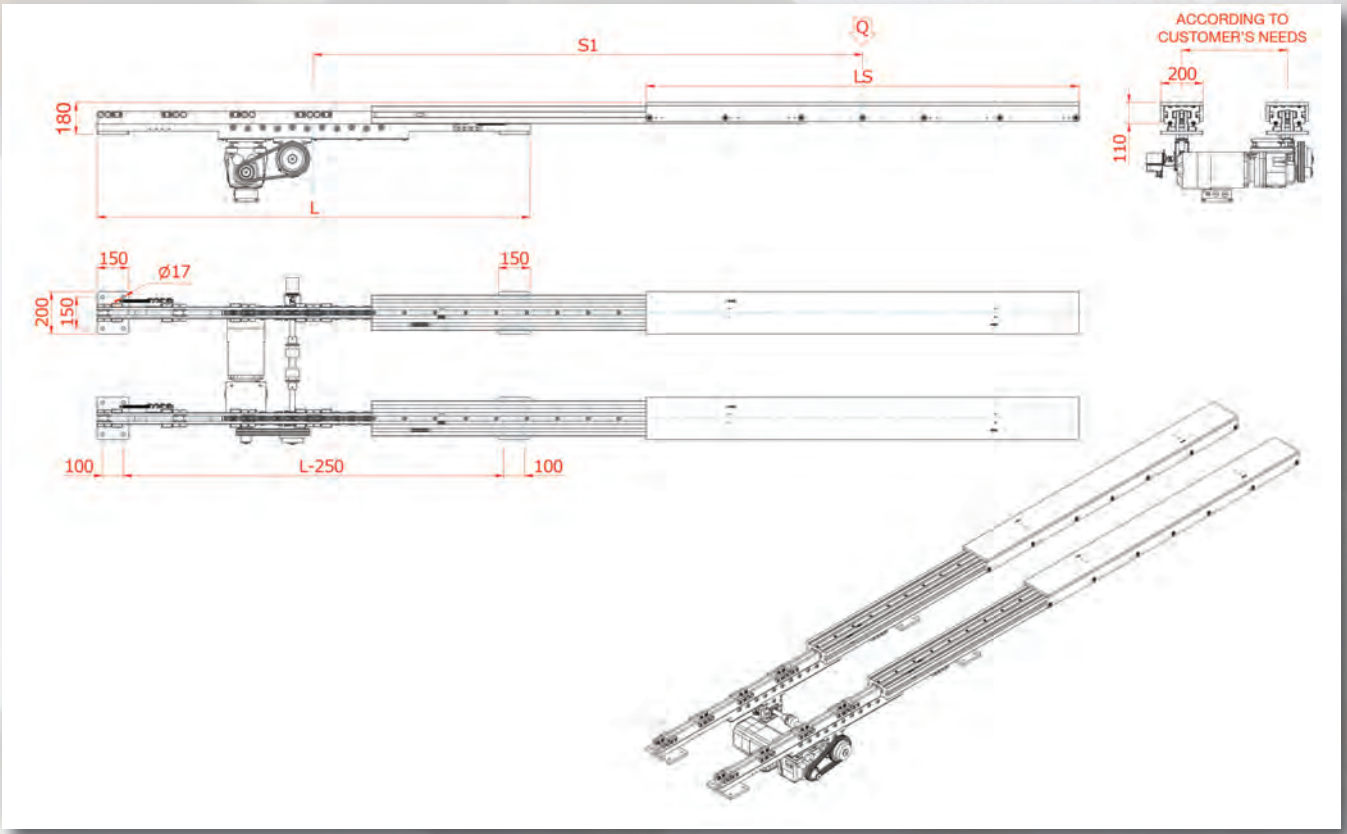

LHD
LOAD HANDLING DEVICES

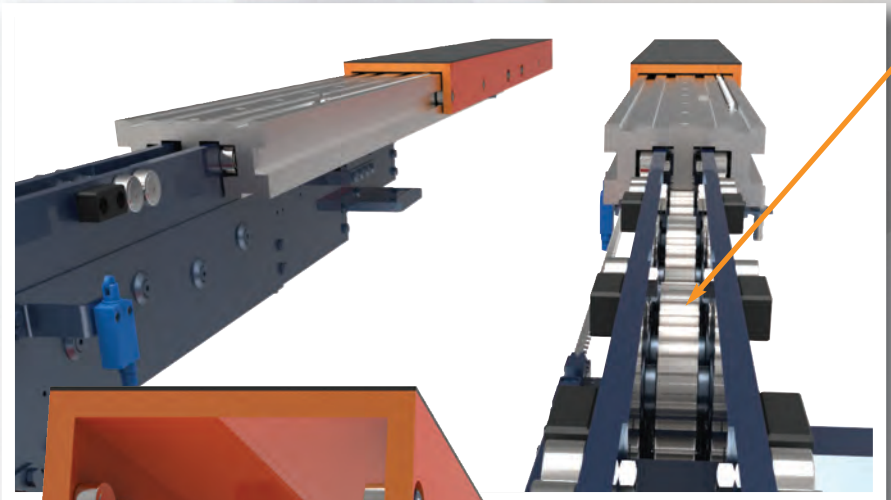

gear train made of heat-treated and nitrided 42CrMo4

slides are milled from a whole workpiece to ensure limited bending

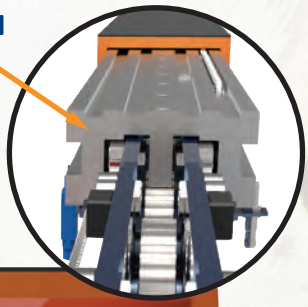

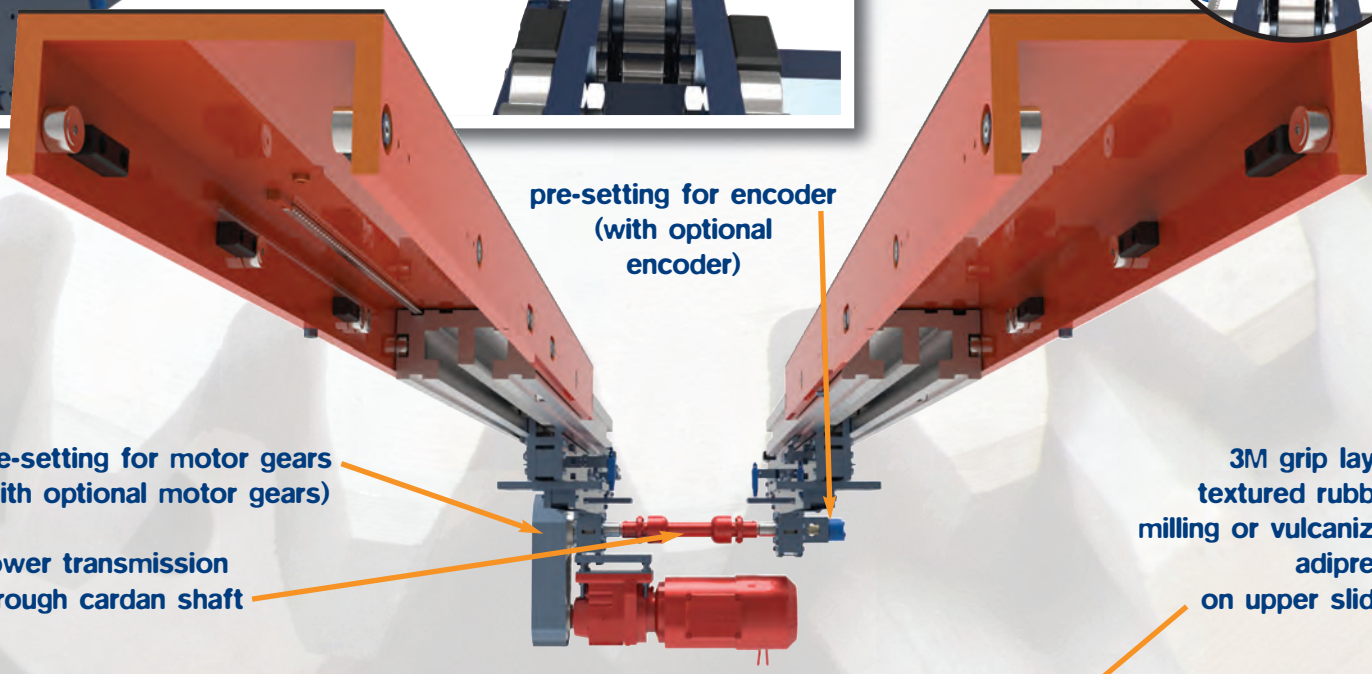

pre-setting for encoder (with optional encoder)

pre-setting for motor gears (with optional motor gears)

power transmission through cardan shaft

3M grip layer, textured rubber, milling or vulcanized adiprene on upper slides

110 mm slide thickness (with 1.500 Kg payload)

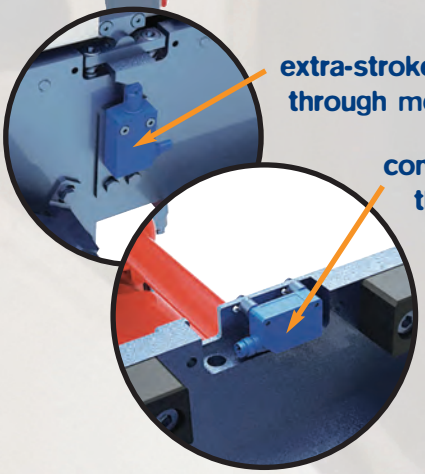

extra-stroke control through mechanical micro-switches

control of centre position through photocells or inductive sensors

longitudinal plays adjustment

lateral plays adjustment

rollers with lubricater

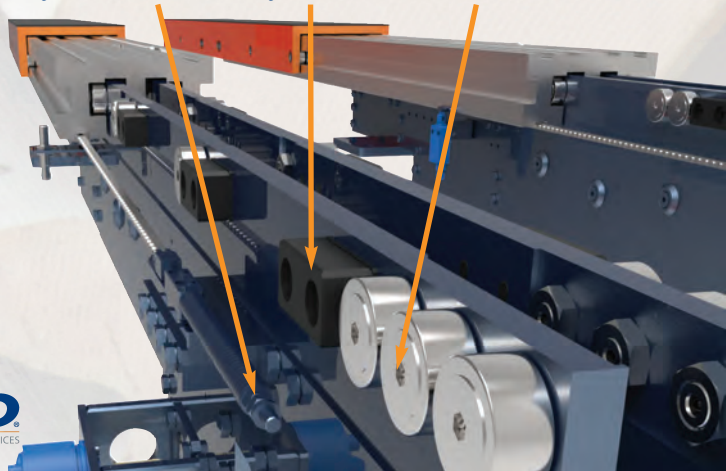

LHD LOAD HANDLING DEVICES

follow us on

LHD®
LOAD HANDLING DEVICES

HeadQuarter - LHD S.p.A.
Europe production site

Mr. Giuliano Rivoir
Mobile +39 345 187 9559
Phone/Fax +39 011 908 62 70
g.rivoir@lhd.co.com
info@lhd.co.com
Via Piossasco-Rivalta 30-32
10090 Bruino (TO), Italy
Skype LHD SpA

LHD China/太仓艾拉德
Taicang LHD Co., Ltd.
China production site

Mr. Wenbao Zheng/郑文保
No. 68, East Luoyang Road,
Taicang Economic
Development Area,
215400 Taicang,
Jiangsu, China
Mobile/手机 +86 159 3411 99 19
Phone/座机 +86 (0)512 53 547 892
wenbao.zheng@lhd.co.com

Managing Director

Mr. Daniele Ribetto
Mobile +39 346 727 46 78
d.ribetto@lhd.co.com

LHD Deutschland
Österreich & Schweiz

Mr. Silvano Griot
Mobile +39 391 763 55 79
s.griot@lhd.co.com

LHD Western Europe

Mr. Jacopo Trivero
Mobile +39 391 350 64 30
j.trivero@lhd.co.com

LHD Thailand

Mr. Teeradon Anumas
Master Automation Co., Ltd.
Phra Nakhon Si Ayutthaya, Thailand
Mobile +66 8 5516 2777
teeradon.anumas@ma-thailand.com

LHD South Korea

Mr. Ryang Park
G&S Seojin Co., Ltd.
Seoul, South Korea
Mobile +82 10 2951 4960
Phone +82 2 717 7686
rpark@gs-seojin.com

LHD South East Asia

Mr. Roger Chen/陈雁
Mobile/手机 +86 133-0622-8955
Phone/座机 +86 (0)512-53-837-823
roger.chen@lhd.co.com

LHD India

Mr. Mahmood Haider
Noida, New Delhi, India
Mobile +91 98910 98818
m.haider@lhd.co.com

Purchasing

Mr. Davide Gomez
Mobile +39 392 429 61 63
d.gomez@lhd.co.com